SY60C

SWING BOOM EXCAVATOR

13,228 LBS OPERATING WEIGHT
56.9 HP GROSS HORSEPOWER
13.1' MAX DIGGING DEPTH

SANY



BUILT **FOR TIGHT** VERSATILITY

EASY TO **OWN, OPERATE, & SERVICE**

INDUSTRY'S STRONGEST STANDARD WARRANTY

5-YEAR* 5,000 HOURS

*Warranty applies to 2026 Excavator and Wheel Loader models

MADE FOR AMERICAN OPERATORS

In the suburbs of Georgia, a dedicated landscaper relies on his SY60C to install retaining walls and trench for drainage systems on residential projects. Every job matters, and his excavator is built to handle them all. The reliable Yanmar engine and smooth load-sensing hydraulics with pilot control give him the power and precision he needs, and the 5-year/5,000-hour warranty protects his investment with every hour of work. With support from his local dealer and the SANY America team, he knows his machine will be ready when the job demands it. For landscapers like him, SANY provides critical tools he depends on to get the toughest work done.











C | CONVENTIONAL RADIUS TAIL (C)

The SY60C features a conventional tail swing design that delivers the balance and stability of a larger excavator while maintaining a compact footprint. This allows the machine to handle powerful digging and lifting with confidence, giving operators the solid, predictable feel compared to reduced or zero tail machines.

QUICK COUPLER COMPATIBLE

The SY60C comes standard with factory quick-coupler plumbing and cab controls, with OEM couplers available through your local SANY dealer. This makes adding a coupler less expensive, easy, and fully integrated. Couplers improve jobsite efficiency, simplify transport, and increase versatility, giving you more capability from the same machine.

COMPONENTS YOU TRUST

The SY60C is built with components by brands you know and trust. From Yanmar to Hengli, you're getting a machine made with familiar, proven, reliable systems that offer ample support. It's an ecosystem of dependable components that make ownership easier.

BACKFILL BLADE STANDARD

The SY60C comes standard with a heavy-duty backfill blade for pushing spoil piles, backfilling trenches, and rough grading. Blade float allows the blade to follow ground contours for smoother results, while the blade itself provides a more stable working platform when digging and lifting, improving control and confidence.

AUXILLARY HYDRAULICS

The SY60C Includes factory-installed auxiliary hydraulics: a high-flow primary circuit, a circuit, and a case drain. The primary circuit supports one-way flow, two-way flow and continuous flow. All auxiliary flow settings are easily adjustable from the cab display.

10,100+
FOOT POUNDS

Bucket breakout force.

A MACHINE THAT'S EASY TO OWN

This compact SY60C is built for versatility, giving operators a capable, agile machine that supports construction tasks with a conventional tail design that improves balance and stability while maintaining a compact footprint and a standard backfill blade. Simple to transport behind heavy-duty pickup trucks and trailers, it remains a true workhorse for small job sites and landscapers seeking capability without complication. Factory quick-coupler plumbing and auxiliary hydraulic lines accelerate attachment changes, providing flexibility without added hassle delay. Built using trusted, proven components that are fully supported, the SY60C delivers long-term reliability. A rugged chassis engineered for stability and safety in tight spaces helps it work hard, adapt easily, and keep ownership simple day after day.

RELIABLE FROM THE INSIDE OUT

Long operating days, crew safety, and dependable income all depend on machinery you trust, and the SY60C is engineered with that purpose in mind—designed to provide thousands of productive operating hours in demanding, confined jobsite conditions. Its heavy-duty frame is built to withstand constant digging and lifting loads, while the hydraulic system supplies consistent power, force, and pressure. The powertrain is designed to operate continuously, keeping hydraulic pumps running all day long. Every design detail focuses on minimizing downtime and improving efficiency, output, and productivity. That's why the SY60C comes standard with a 5-year / 5,000-hour warranty, delivering proven dependability that helps keep your schedule moving forward.



STRUCTURAL INTEGRITY

SANY machines don't cut corners on steel. We build each machine with the material it needs to deliver strength, stability and durability. Reinforced booms and sticks with internal ribbing add stiffness and rigidity, while the reinforced X-frame undercarriage is built to take a beating on the toughest terrain. In our state-of-the-art factories, robotic welding and CNC cutting ensure every part fits properly and is welded to last. Strict quality control then confirms the structural integrity meets our standards before it ever reaches your jobsite.

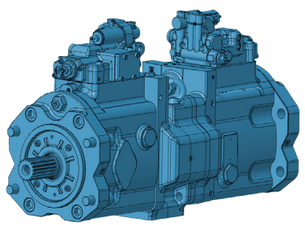

HYDRAULIC SYSTEM

The SY60C uses a pilot-controlled hydraulic system giving operators a smooth, predictable feel at the controls. Its load-sensing hydraulics deliver fast cycle speeds, strong breakout forces and excellent lifting performance. Auxiliary hydraulic flow is easily adjustable from the cab display with a case drain included standard from the factory. And with Parker hydraulic components throughout, the system is built to handle the high stress and demanding work your projects require.

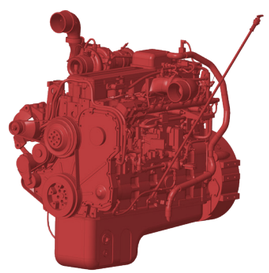

POWERTRAIN BY YANMAR

Powered by an Yanmar 4TNV98C diesel engine that meets or exceeds EPA emissions regulations, the SY60C provides the efficiency and compliance your business needs. With 56.9 hp at 2,000 rpm, it delivers the power and torque to run day and night on the most demanding jobsites. It's a powertrain you already know and trust—backed by a major support network—where parts, service and expertise are always within reach. That means more uptime, less worry and a machine that works as hard as you do.

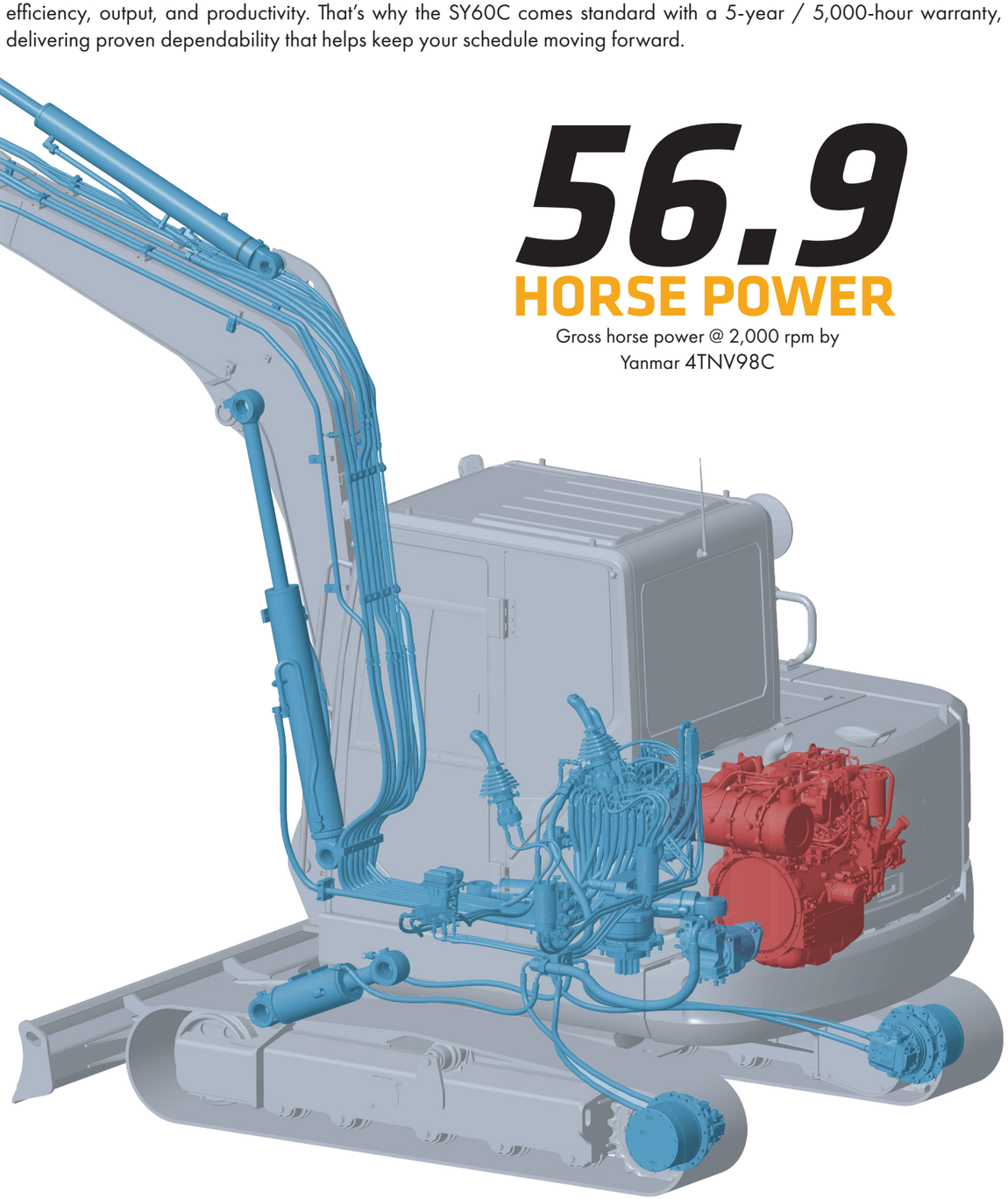

56.9

HORSE POWER

Gross horse power @ 2,000 rpm by Yanmar 4TNV98C



16+ FEATURES

specifically designed for operator and jobsite safety.

SAFETY PRIORITIZED

We design for safety first. Operators get secure handrails, OEM FOPS cab guarding, and a ROPS-verified cab with multiple exit points. A retractable seatbelt and emergency shut-off add protection inside, while cameras, alarms, and 360° lighting enhance awareness for a safer jobsite.

SY60C

MINI HYDRAULIC
EXCAVATOR

13,228 LBS OPERATING WEIGHT
56.9 HP GROSS HORSEPOWER
13.1' MAX DIGGING DEPTH

SANY

TECHNICAL SPECIFICATIONS

MACHINE DATA	STANDARD STICK
Operating Weight*	13,228 lbs
Bolt-on Counterweight	-
Ground Pressure	4.8 psi
Engine Model	4TNV98C
Displacement	202.5 in³
Net Power	55.1 HP @2,000 rpm
Gross Power	56.9 HP @2,000 rpm
Hydraulics	Load Sensing with Pilot Control
Main Hydraulic Pump	Axial Piston – Variable Displacement
Operating Flow (Max)	39.1 gpm
Operating Pressure (Max)	3,916 psi
Auxiliary Flow	23.8 gpm
Auxiliary Pressure	3,626 psi
Travel Motor	Axial Piston with Park Brake
Travel Pressure (Max)	3,916 psi
Travel Speeds (Max)	1.4 / 2.5 mph
Travel Effort (Max)	13,489 lbf
Gradability	30°
Swing Motor	Axial Piston with Swing Brake
Swing Pressure (Max)	2,770 psi
Swing Speed (Max)	10 rpm
Undercarriage	Belted Rubber Track
Track Shoe Width	1' 4"
Track Rollers	5 Per Side
Carrier Rollers	1 Per Side

WORKING SPECIFICATIONS

	WORKING RANGE	STANDARD STICK
	Boom Length	9' 10"
	Stick (Arm) Length	5' 7"
A	Maximum Digging Height	18' 10"
B	Maximum Dumping Height	13' 2"
C	Maximum Digging Depth	13' 1"
D	Maximum Vertical Wall Digging Depth	10' 6"
E	Maximum Reach at Ground Level	20' 2"
F	Minimum Swing Radius	8' 8"

DIGGING PERFORMANCE	STANDARD STICK
Boom Length	9' 10"
Stick (Arm) Length	5' 7"
Bucket Breakout Force (ISO)	10,116 lbf
Stick (Arm) Digging Force (ISO)	7,419 lbf

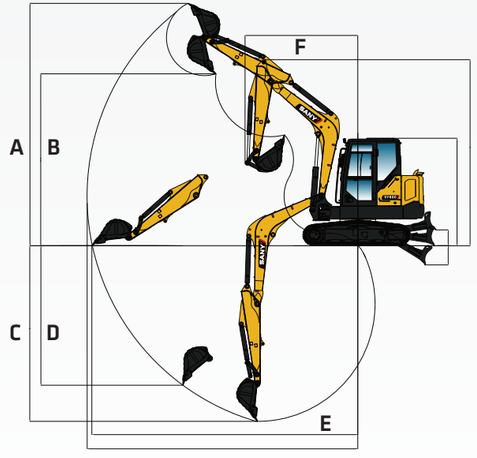

*Operating weight is for the SY60C with no attachments, and standard stick.

SANY America Inc. reserves the right to change these specifications at any time without prior notification. ©2026 SANY America Inc. HEXPS26SY60C001

MINI HYDRAULIC EXCAVATOR SY60C

STANDARD FEATURES

ENGINE
- Yanmar 4TNV98C-WSY
- Tier 4F / EU Stage V Ready
- Auto-idle and shutoff
- Dual-element dry air filter
- Coolant Expansion tank
- Electronic engine control
- Fan guard
- Engine coolant to –37 deg. C (–34 deg. F)
- Full-flow oil filter
- High flow cooling fan
- 500-hour engine-oil-change interval
- No scheduled DPF maintenance for 6000 hours
- Fuel filter and water separator

HYDRAULIC SYSTEM
- Spring-applied, hydraulically released automatic swing brake
- Load sensing hydraulic system
- Control pattern change valve
- Primary auxiliary hydraulic circuit with 1 and 2-way combination piping
- Auxiliary hydraulic-flow adjustments through monitor
- Adjustable auxiliary pressure relief
- Quick coupler ready

UNDERCARRIAGE
- Planetary drive with axial piston motors
- Propel motor shields
- Spring-applied, hydraulically released automatic propel brake
- Track guides, front idler and 2 per side
- 2-speed travel selection through display
- 5 lower track rollers each side
- 1 upper carrier roller each side
- Dozer blade with float function and cylinder guarding
- Tie downs on track frame and dozer blade
- 400mm (16") wide rubber tracks
- 400mm (16") wide steel tracks
- Case drain line
- Undercarriage frame opening guard

UPPERSTRUCTURE
- Right-hand, left-hand, and counterweight mirrors
- Lockable cab, hood, and service doors
- Debris screen in side panel
- Remote-mounted engine oil and fuel filters
- Daily fluid level inspection visible from ground
- Rear reflectors

ATTACHMENTS
- Convenient grease points
- Dirt seals on all bucket pins
- Thumb bracket

ATTACHMENTS
- Oil-impregnated bushings
- Reinforced thrust plates
- Quick coupler plumbing to end of the stick

OPERATOR'S STATION
- Hydraulic pilot controls for boom, stick, swing, and travel operations
- Proportional auxiliary switches on joystick
- Travel levers with foot pedals
- AM/FM radio with bluetooth and a 12V outlet port
- Cell phone tray
- Weight adjustable suspension cloth seat with fore/aft adjustment and adjustable armrests
- Retractable seatbelt
- Emergency stop switch
- Sliding front window
- Removable lower front window
- Window breaker
- ECO mode switch
- 8 tool selection modes
- Fully adjustable auxiliary flow circuits and pressure from display
- Multifunction LCD monitor with: Auto-shutoff indicator and setup, Radio with Bluetooth, HVAC control, operator and owner master passwords and diagnostic capability / multiple-language
- Operator E-Panel
- Keyless start switch and engine speed throttle
- System monitoring features: Auto-idle indicator, 2-speed indicator, work-mode indicator, preheat icon, time and date, battery charge icon, throttle position, engine oil pressure alarm, DPF regeneration inhibit indicator, fuel level gauge, maintenance needed icon, failure code, standard/eco work mode icon, ,engine coolant temperature, coolant temp alarm, severe failure alarm, work tool mode icon, operating hours
- High performance heating, ventilation, and air conditioning system
- Operation and maintanence manual storage
- Heavy duty removeable rubber floor mat
- Front windshield wiper with high and low speed
- Horn, electric
- Hour meter, electric
- Hydraulic shutoff lever, all controls
- Interior light
- Cup holder
- Travel alarm with cancel switch
- Transparent overhead hatch with retractable sun shade

ELECTRICAL
- 12V electrical system
- Maintenance free battery
- Ground level battery disconnect
- Easy access fuse panel
- Terminal battery covers
- 80-amp alternator
- 12V power outlet

LIGHTS
- Work lights: 3 mounted on top of cab, 1 mounted on boom, magnetic beacon

In the interest of continual equipment development, SANY America Inc. reserves the right to change these specifications at any time without prior notification.
©2026 SANY America Inc. HEXPS26SY60C001

LIFTING PERFORMANCE

Standard 9' 10" Boom
Standard 5' 7" Stick
Standard 1' 4" Track Shoes
No Bucket

Ratings are based on ISO 10567:2007. Lift capacity does not exceed 75% of tipping load with the machine on firm, level ground or 87% of hydraulic lifting capacity.

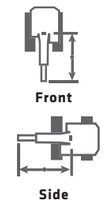

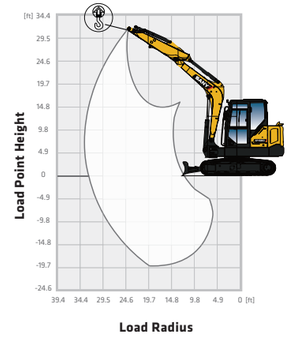

Blade Up

B (HEIGHT)	6.6 FT		9.8 FT		13.1 FT		16.4 FT		MAX	
LOAD POINT HEIGHT										
13.1 ft									2,866 lbs	2,646 lbs
9.8 ft					*3,086 lbs	3,197 lbs	1,764 lbs	2,094 lbs	1,764 lbs	2,094 lbs
6.6 ft			4,079 lbs	4,630 lbs	3,086 lbs	2,976 lbs	1,874 lbs	2,094 lbs	1,433 lbs	1,874 lbs
3.3 ft			2,646 lbs	4,189 lbs	2,866 lbs	2,756 lbs	1,543 lbs	1,984 lbs	1,433 lbs	1,764 lbs
0.0 ft			3,527 lbs	2,425 lbs	4,409 lbs	2,646 lbs	1,543 lbs	1,984 lbs	1,433 lbs	1,764 lbs
-3.3 ft	7,937 lbs	5,291 lbs	3,858 lbs	2,646 lbs	2,535 lbs	1,764 lbs			1,984 lbs	1,433 lbs
-6.6 ft	8,818 lbs	5,181 lbs	3,968 lbs	2,646 lbs	2,646 lbs	1,874 lbs			2,646 lbs	1,874 lbs

Blade Down

B (HEIGHT)	6.6 FT		9.8 FT		13.1 FT		16.4 FT		MAX	
LOAD POINT HEIGHT										
13.1 ft									3,197 lbs	2,646 lbs
9.8 ft					*3,197 lbs	3,197 lbs	3,086 lbs	2,094 lbs	3,086 lbs	2,094 lbs
6.6 ft			*5,074 lbs	4,630 lbs	*3,968 lbs	2,976 lbs	2,425 lbs	2,094 lbs	2,205 lbs	1,874 lbs
3.3 ft			6,614 lbs	4,189 lbs	4,409 lbs	2,756 lbs	2,094 lbs	1,984 lbs	2,094 lbs	1,764 lbs
0.0 ft			4,850 lbs	3,968 lbs	4,409 lbs	2,646 lbs	2,094 lbs	1,874 lbs	1,874 lbs	1,764 lbs
-3.3 ft	8,377 lbs	5,291 lbs	6,063 lbs	2,646 lbs	4,079 lbs	1,764 lbs			3,197 lbs	1,433 lbs
-6.6 ft	8,818 lbs	5,181 lbs	5,401 lbs	2,646 lbs	3,417 lbs	1,874 lbs			3,417 lbs	1,874 lbs

In the interest of continual equipment development, SANY America Inc. reserves the right to change these specifications at any time without prior notification.
©2026 SANY America Inc. HEXPS26SY60C001

sanyamerica.com ||| SY60C

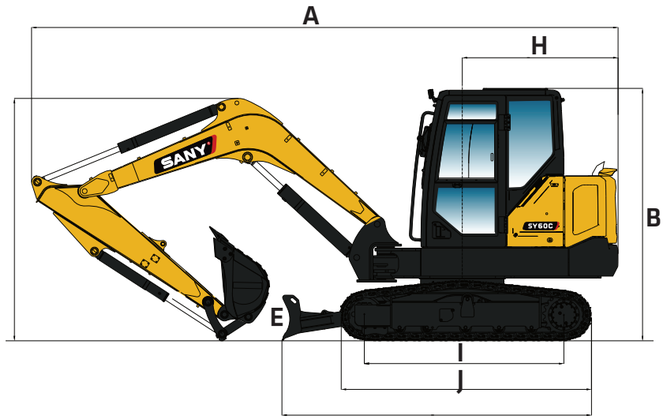

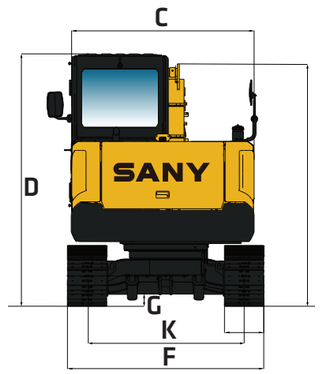

DIMENSIONS		STANDARD STICK
	Boom Length	9’ 10”
	Stick (Arm) Length	5’ 7”
A	Transport Length	19’ 8”
B	Transport Height	8’ 6”
C	Upper Structure Width	6’ 2”
D	Cab Height	8’ 6”
E	Blade Height	1’ 5”
F	Track Width	6’ 7”
G	Ground Clearance	1’ 1”
H	Tail Swing Radius	5’ 1”
I	Track Length on Ground	6’ 9”
J	Track Length	8’ 6”
K	Track Gauge	6’ 9”

SERVICE REFILL CAPACITIES	
Fuel Tank Capacity	33.02 gal
Hydraulic Tank Capacity	22.45 gal
Engine Oil Capacity	2.54 gal
Cooling System Capacity	2.75 gal

In the interest of continual equipment development, SANY America Inc. reserves the right to change these specifications at any time without prior notification.
©2026 SANY America Inc. HEXPS26SY60C001

INDUSTRY’S STRONGEST STANDARD WARRANTY | 5-YEAR* 5,000 HOURS

*Warranty applies to 2026 Excavator and Wheel Loader models

SANY America Inc. 318 SANY Way
Peachtree City, Georgia 30269
470.552.SANY sanyamerica.com

CONNECTED, **INFORMED**, IN CONTROL
TECHNOLOGY

CONNECTED EVI TELEMATICS

EVI is SANY’s proprietary telematics platform and is available through your local dealer on excavators. This dashboard lets you track and geofence the machine, view reports on consumption and run time, monitor error codes and manage your SANY fleet—all with more features continually being launched to keep you connected and in control.

ATTACHMENT CONTROL

The SY60C’s in-cab display includes preset attachment profiles and allows selection of one-way or two-way flow and continuous flow adjustments. Operators can fine-tune settings on the fly to maintain control and maximize performance.

INFORMATION AT YOUR FINGERTIPS

The touchscreen display is the operator’s hub, showing key machine metrics like fuel, engine and hydraulic temperatures, service codes and more. It also displays the back up camera, allows quick adjustment of HVAC, and radio while also supporting Bluetooth hands-free calling, and operator presets—all in one easy-to-use central command center.



DO EVERYTHING

Perform tasks and view important data all through one display.

5
POINTS
of seat adjustablity.

DESIGNED FOR **COMFORT ALL SHIFT LONG**

This spacious cab is built for comfort and intuitiveness with safety and ergonomics at the core. The seat offers 5 adjustment points to achieve the ideal position for all-day comfort. SANY's E-panel places common functions within easy reach and the touchscreen display serves as the control hub. Upgraded HVAC keeps the cab comfortable in any weather, while Bluetooth connectivity and improved noise isolation allow clear hands-free calls. Large glass panels maximize visibility of the work area, helping operators stay comfortable and productive throughout the shift.

BUILT **AROUND THE OPERATOR**



CUSTOM OPERATOR ERGONOMICS

The adjustable mechanical suspension seat gives operators complete control over their seating position—height, and distance—so they can align perfectly with the joysticks and foot pedals. This precise adjustability supports better control and a more comfortable working posture all day long.

OPTIMAL JOBSITE AWARENESS

Large glass panels, sliding side window, and integrated backup cameras give operators a clear view of their surroundings. With added surround-view mirrors, they can confidently and safely control the machine on the jobsite.

INTENTIONALLY **ENGINEERED** FOR SERVICE

UPTIME IS OUR PRIORITY

With fast diagnostics, streamlined repairs and software tools for remote support it's easy to keep your SANY excavator running strong. Our local dealer network, stretching across North America, provides quick response and maximizes your productivity.

DEDICATED TO SUPPORT

We're expanding our U.S. footprint with local engineering, quality assurance and service teams—backed by a multi-year investment in support, training, and parts.

EASE OF ACCESS

Its spacious compartments offer ample room for tools, filters, and components, ensuring efficient inspections and replacements that minimize downtime on the job site.

FAST DAILY PRE-CHECKS

Machines are designed so operators can safely and easily inspect critical systems—mostly from the ground—for quick visual and manual checks.

PARTS ON THE SHELF READY TO SHIP

We continually expand parts inventory across our major North American distribution centers and improve forecasting to keep high-demand components in stock. This longterm strategy ensures critical parts are ready to ship when they're needed most.







WE'VE GOT YOUR BACK

At SANY, we see every customer as a relationship whose success is directly tied to ours. We focus on keeping you productive, because when your machines are running, your business is winning. Our warranty support, faster claim approvals are built to protect your operations not just your equipment. Your feedback fuels continuous improvement—real updates to software, hydraulics, and performance through close collaboration with key suppliers. With expanding U.S. support, trained technicians, ongoing investments, and stronger parts availability, we stay by your side so your business can keep moving forward.



CUSTOMERS FIRST ALWAYS

At SANY America, everything begins with you. We design machines that make your work safer, more efficient, and more profitable—and we stand behind them with U.S.-based support you can count on. From ergonomic cabs and superior visibility to quick daily checks and dependable uptime, every feature is engineered around real operator needs and real jobsite demands. Your feedback directly drives our product improvements, accelerating software updates, hydraulic refinements, and long-term durability enhancements. With expanding American facilities, local engineering and service teams, certified technicians, and three parts distribution centers nationwide, we operate as your committed business partner—focused on your success today and every day ahead.

INDUSTRY'S **STRONGEST** STANDARD WARRANTY

SANY America delivers the most comprehensive standard warranty in the industry—protecting your investment from day one.

- **5 years / 5,000 hours of full machine coverage included with every excavator**
- **Lower total operating risk and fewer unexpected costs over machine life**
- **Confidence in long-term durability backed by factory engineering and testing**
- **Stronger coverage than leading OEM competitors – standard, not add-on**

Choosing SANY means choosing equipment built to work—and a partner committed to standing behind your success.

FINANCING THAT WORKS AS HARD AS YOU DO

Smart financing that makes owning SANY equipment faster, easier, and affordable.

- **Quick approvals – many customers approved in under 5 minutes**
- **Simple mobile app for secure document signing and easy payment management**
- **Flexible terms and competitive promotions, including 0% for 60 months**
- **Faster approvals for repeat customers to keep your fleet growing**
- **Top-rated experience with a 4.95 out of 5 Trustpilot score**

Financing with SANY is built to support your business growth every step of the way.

TOTAL COST OF OWNERSHIP

SANY machines are engineered to deliver a stronger return on investment by lowering the true cost of ownership over the life of your equipment.

- **Fuel-efficient performance reduces operating costs every hour the machine runs**
- **Extended service intervals minimize downtime and maintenance expense**
- **Parts cost management keeps replacement and wear items affordable**
- **High resale value helps protect your investment over time**
- **More standard features from the factory reduce the need for costly add-ons**

Every detail is designed to help you earn more, spend less, and get maximum value from every machine you own.



*Warranty applies to 2026 Excavator and Wheel Loader models.

SANY America Inc.
318 SANY Way
Peachtree City | GA 30269
T | 470-552-SANY

BRCE26SY60C001

sanyamerica.com

In the interest of continual equipment development, SANY America Inc. reserves the right to change these specifications at any time without prior notification.

© 2026 SANY America Inc.